BC1010 - Overview

MADE IN USA

10-channel DC Voltage Chaser, with simple pattern cycle:
Light-Chase (1 Channel ON, the rest OFF)
for LED and other constant voltage loads

BC1010 Light Chaser Board: 10 x 8 Amps @ **8 - 24VDC**

Selectable
- Number of channels: **2 to 10** (Insert-Jumper)
- Speed: **1 to 30 steps / second** (Trim-Pot-Dial)

Jumper set to: 10

10 9 8 7 6 5 4 3 2

Circuits

	1	2	3	4	5	6	7	8	9	10
Step 1:	●	○	○	○	○	○	○	○	○	○
Step 2:	○	●	○	○	○	○	○	○	○	○
Step 3:	○	○	●	○	○	○	○	○	○	○
Step 4:	○	○	○	●	○	○	○	○	○	○
Step 5:	○	○	○	○	●	○	○	○	○	○
Step 6:	○	○	○	○	○	●	○	○	○	○
Step 7:	○	○	○	○	○	○	●	○	○	○
Step 8:	○	○	○	○	○	○	○	●	○	○
Step 9:	○	○	○	○	○	○	○	○	●	○
Step 10:	○	○	○	○	○	○	○	○	○	●
Step 1:	●	○	○	○	○	○	○	○	○	○
Step 2:	○	●	○	○	○	○	○	○	○	○
Step 3:	○	○	●	○	○	○	○	○	○	○
Step 4:	○	○	○	●	○	○	○	○	○	○
Step 5:	○	○	○	○	●	○	○	○	○	○
Step 6:	○	○	○	○	○	●	○	○	○	○
Step 7:	○	○	○	○	○	○	●	○	○	○
Step 8:	○	○	○	○	○	○	○	●	○	○
Step 9:	○	○	○	○	○	○	○	○	●	○
Step 10:	○	○	○	○	○	○	○	○	○	●

Dimensions

Full Board:
L: 4 3/16" x W: 2 5/8" x H: 15/16"

Mounting Holes:
L: 3 15/16" x 2 3/8"

Leave clearance space on all sides to allow for wiring space, and use spacers below the board

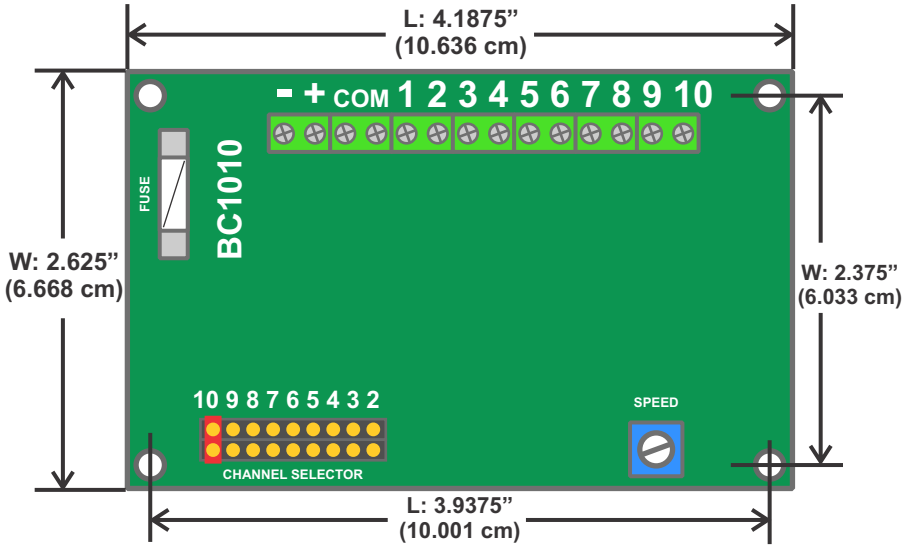

Copyright © 2026 Digital Lighting Systems, All Rights Reserved • Specifications are subject to change without notice • *Printed* in USA

BC1010 - Power Wiring Block - Channel Selection

CAUTION: ONLY BC1010

8 - 24 VDC Wiring

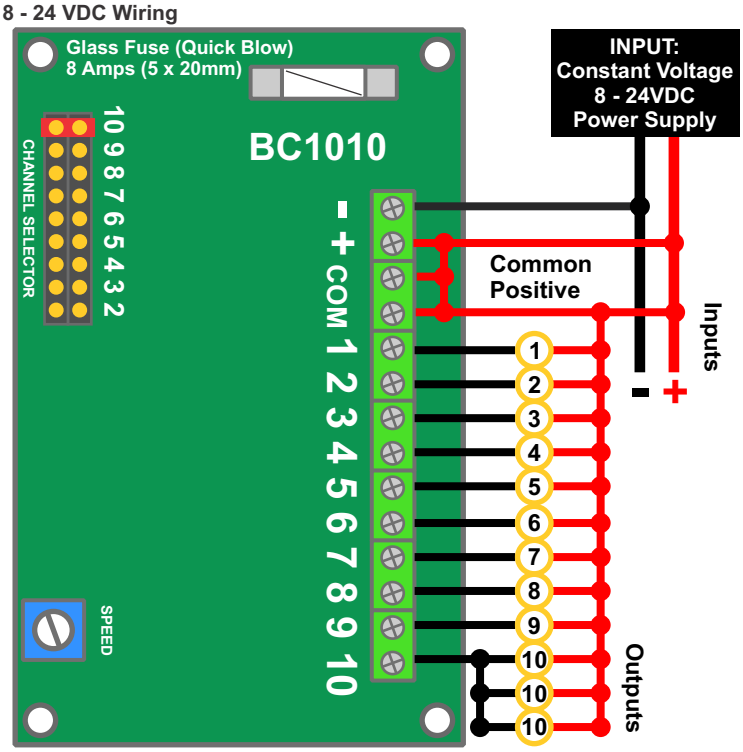

MUST:
- Wire inputs **+/-** to 2-position terminal
- Wire **outputs** as shown
(Positive terminals connected internally)
- Never exceed **8 Amps** per output
- Input constant voltage (**8 - 24VDC**)
- Never **parallel** outputs to increase capacity
- Note: **Fuse** replaceable if blown
(Glass Fuse **8 Amps** - Quick Blow - 5x20mm)

CAN:
- Select number of **channels/steps** by moving **insert jumper** to the corresponding position

- Adjust **chasing speed** by rotating **trim-pot-dial** w/ flathead screwdriver

DIMENSIONS:

L: 4.19” x W: 2.63” x H: 0.94”

(leave clearance on all sides to allow for wiring space, and use spacers below board)

Jumper set to: 2

Circuits

	1	2	3	4+
Step 1:	○	●	●	●
Step 2:	●	○	●	●
Step 1:	○	●	●	●
Step 2:	●	○	●	●
Step 1:	○	●	●	●
Step 2:	●	○	●	●
Step 1:	○	●	●	●
Step 2:	●	○	●	●

Jumper set to 2
Gives off the illusion of steady Blinking / Flashing!

If the entire marquee load is wired to a single channel of the BC1010 unit.
Keep MAX load in mind:
8 Amps: 192W @ 24V

Jumper set to: 3

Circuits

	1	2	3	4+
Step 1:	○	●	●	●
Step 2:	●	○	●	●
Step 3:	●	●	○	●
Step 1:	○	●	●	●
Step 2:	●	○	●	●
Step 3:	●	●	○	●
Step 1:	○	●	●	●
Step 2:	●	○	●	●
Step 3:	●	●	○	●

Jumper set to 3+
Also accomplishes same illusion, IF: attempting to flash/blink less often (longer dark step)

NEVER Attempt to Parallel Outputs to increase capacity

Jumper set to: 5

Circuits

	1	2	3	4	5	6	7	8	9	10
Step 1:	○	●	●	●	●	●	●	●	●	●
Step 2:	●	○	●	●	●	●	●	●	●	●
Step 3:	●	●	○	●	●	●	●	●	●	●
Step 4:	●	●	●	○	●	●	●	●	●	●
Step 5:	●	●	●	●	○	●	●	●	●	●
Step 1:	○	●	●	●	●	●	●	●	●	●
Step 2:	●	○	●	●	●	●	●	●	●	●
Step 3:	●	●	○	●	●	●	●	●	●	●
Step 4:	●	●	●	○	●	●	●	●	●	●
Step 5:	●	●	●	●	○	●	●	●	●	●
Step 1:	○	●	●	●	●	●	●	●	●	●
Step 2:	●	○	●	●	●	●	●	●	●	●
Step 3:	●	●	○	●	●	●	●	●	●	●
Step 4:	●	●	●	○	●	●	●	●	●	●
Step 5:	●	●	●	●	○	●	●	●	●	●

KEY: ○ Lights ON
● Lights OFF

Jumper set to: 10

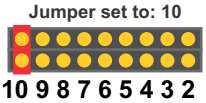

Circuits

	1	2	3	4	5	6	7	8	9	10
Step 1:	○	●	●	●	●	●	●	●	●	●
Step 2:	●	○	●	●	●	●	●	●	●	●
Step 3:	●	●	○	●	●	●	●	●	●	●
Step 4:	●	●	●	○	●	●	●	●	●	●
Step 5:	●	●	●	●	○	●	●	●	●	●
Step 6:	●	●	●	●	●	○	●	●	●	●
Step 7:	●	●	●	●	●	●	○	●	●	●
Step 8:	●	●	●	●	●	●	●	○	●	●
Step 9:	●	●	●	●	●	●	●	●	○	●
Step 10:	●	●	●	●	●	●	●	●	●	○
Step 1:	○	●	●	●	●	●	●	●	●	●
Step 2:	●	○	●	●	●	●	●	●	●	●
Step 3:	●	●	○	●	●	●	●	●	●	●
Step 4:	●	●	●	○	●	●	●	●	●	●
Step 5:	●	●	●	●	○	●	●	●	●	●
Step 6:	●	●	●	●	●	○	●	●	●	●
Step 7:	●	●	●	●	●	●	○	●	●	●
Step 8:	●	●	●	●	●	●	●	○	●	●
Step 9:	●	●	●	●	●	●	●	●	○	●
Step 10:	●	●	●	●	●	●	●	●	●	○

Copyright © 2026 Digital Lighting Systems, All Rights Reserved • Specifications are subject to change without notice • *Printed* in USA

LIMITED WARRANTY

Digital Lighting Systems, warrants to the purchaser that its products have been carefully manufactured and inspected and are warranted to be free from defects of workmanship and materials when used as intended. Any abuse or misuse contrary to normal operation shall void this warranty.

Digital Lighting Systems' obligation under this warranty shall be limited to replacement or repair of any units as shall within two years of date of invoice from **Digital Lighting Systems**, prove defective; and **Digital Lighting Systems** shall not be liable for any other damages, whether direct or consequential. **The implied warranties of merchantability and fitness for a particular purpose are limited to the duration of the expressed warranty**. Some states do not allow the exclusion of the limitation of incidental or consequential damages, so the above limitation or exclusion may not apply to you. This warranty gives you specific legal rights, you may also have other legal rights which vary from state to state.

Defective merchandise may be returned to **Digital Lighting Systems**, prepaid, after prior notification has been given and approval obtained for the return. To obtain prior approval for the return of the defective items, contact your local Digital Lighting Systems distributor, representative, or:

Digital Lighting Systems, Inc.
12302 SW 128 Ct. Bay # 105
Miami, FL 33186

(305) 969-8442
info@digitallighting.com

Upon request, replacement unit(s) will be shipped as soon as available. Unless immediate shipment of replacement merchandise is requested, **Digital Lighting Systems** will not ship replacement merchandise until defective merchandise is received, inspected, and determined to be defective.

No labor charges in connection with warranty problems will be reimbursed by Digital Lighting Systems without prior written approval from the factory.

Digital Lighting Systems distributors and representatives have no authority to change this warranty without written permission.

Digital Lighting Systems reserves the right to determine the best method of correcting warranty problems.

Printed in the USA
2026